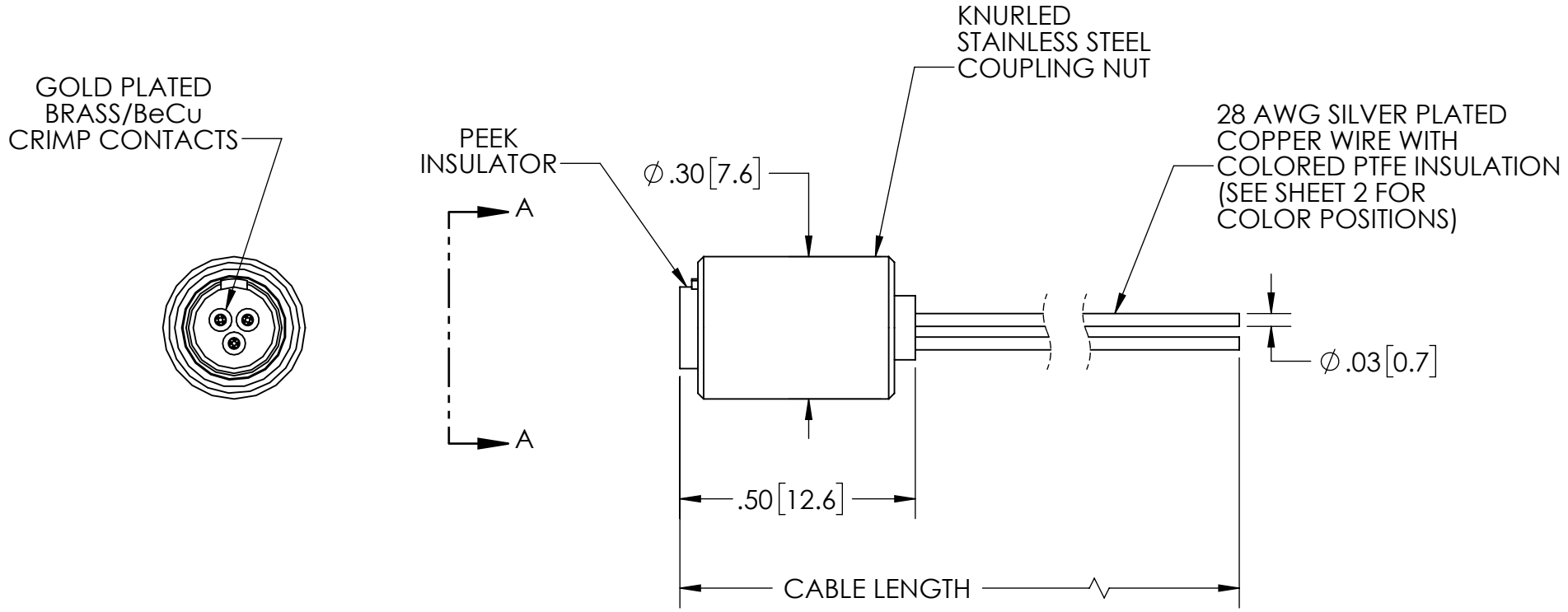

PART NO.	CABLE LENGTH
FA43040	48"
FA43040-02	96"

PERFORMANCE SPECFICATIONS	
VOLTAGE:	250V DC
CURRENT:	3 AMPS
TEMPERATURE:	-55°C TO 125°C

PROPRIETARY AND CONFIDENTIAL
THE INFORMATION CONTAINED IN THIS DRAWING IS THE SOLE PROPERTY OF SOLID SEALING TECHNOLOGY. ANY REPRODUCTION IN PART OR AS A WHOLE WITHOUT THE WRITTEN PERMISSION OF SOLID SEALING TECHNOLOGY IS PROHIBITED.

THIRD ANGLE PROJECTION

TITLE
MICRO C, 3 PIN AIR SIDE
PLUG CABLE ASSEMBLY

SOLID SEALING TECHNOLOGY

REV.	APP'D	DATE	SCALE 3:1	DIMENSIONS IN INCHES [mm]	DRAWN	CW	9/3/2021
B1	JF	12/18/2025	MSMM0128-43		ENG APPR.	JF	09/20/2021

PART NO. (SEE TABLE) REV. B

WWW.SOLIDSEALING.COM

SALES DWG NO. FA43040SL REV. B1

DIMENSIONS ARE FOR REFERENCE ONLY. UNLESS NOTED, NO TOLERANCES ARE IMPLIED. CONSULT SST TO DISCUSS YOUR SPECIFIC REQUIREMENTS.

POSITION	COLOR
1	BLK
2	BRN
3	RED

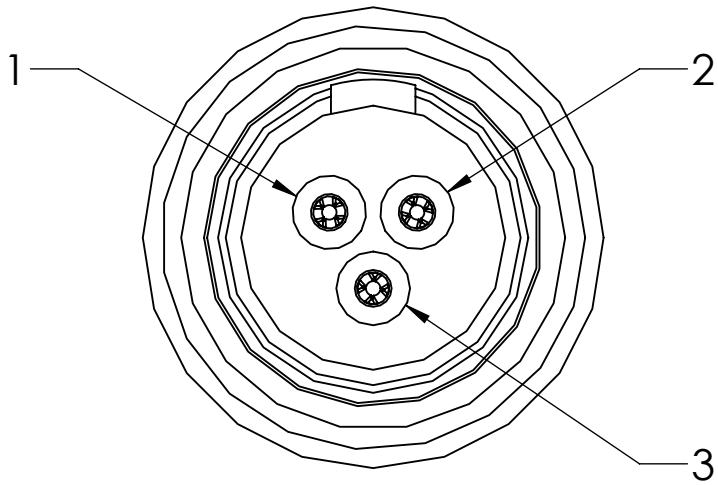

INSULATION COLOR POSITIONS
VIEW A-A (MATING FACE)
SCALE 8:1

PROPRIETARY AND CONFIDENTIAL
THE INFORMATION CONTAINED IN THIS DRAWING IS THE SOLE PROPERTY OF SOLID SEALING TECHNOLOGY. ANY REPRODUCTION IN PART OR AS A WHOLE WITHOUT THE WRITTEN PERMISSION OF SOLID SEALING TECHNOLOGY IS PROHIBITED.

THIRD ANGLE PROJECTION

TITLE
MICRO C, 3 PIN AIR SIDE
PLUG CABLE ASSEMBLY

SOLID SEALING TECHNOLOGY

REV.	APP'D	DATE	SCALE 3:1	DIMENSIONS IN INCHES [mm]	DRAWN	CW	9/3/2021	PART NO. (SEE TABLE) REV. B	WWW.SOLIDSEALING.COM
B1	JF	12/18/2025	MSMM0128-43		ENG APPR.	JF	09/20/2021		SALES DWG NO. FA43040SL REV. B1

DIMENSIONS ARE FOR REFERENCE ONLY. UNLESS NOTED, NO TOLERANCES ARE IMPLIED. CONSULT SST TO DISCUSS YOUR SPECIFIC REQUIREMENTS.

3 PINS

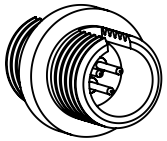

HERMETIC
FEEDTHRU
FA42916
(LASER WELD ONLY)

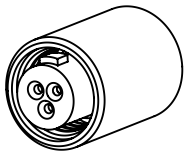

PLUG
FA42930*

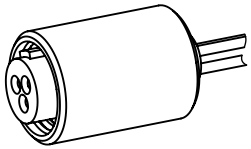

PRE-WIRED PLUG
-KAPTON: FA43039
-PTFE: FA43040

7 PINS

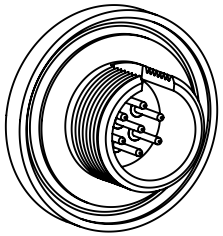

HERMETIC
FEEDTHRU
FA41283

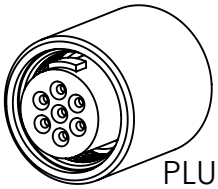

PLUG
FA41289*

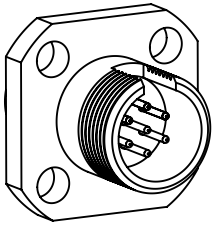

IN-VAC
RECEPTACLE
FA42367

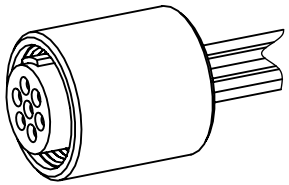

PRE-WIRED PLUG
-KAPTON: FA42314
-PTFE: FA42315

19 PINS

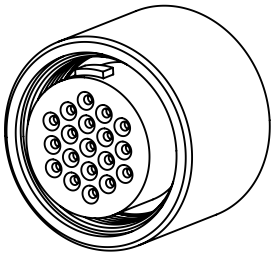

PLUG
FA41232*

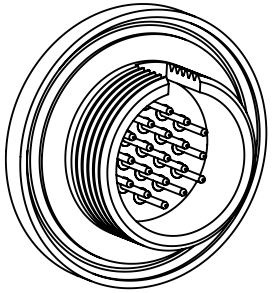

HERMETIC
FEEDTHRU
FA41401

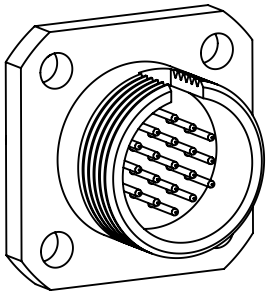

IN-VAC
RECEPTACLE
FA41656

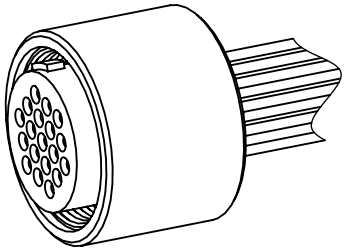

PRE-WIRED PLUG
-KAPTON: FA42316
-PTFE: FA42317

***CONTACTS NOT INCLUDED**

55 PINS

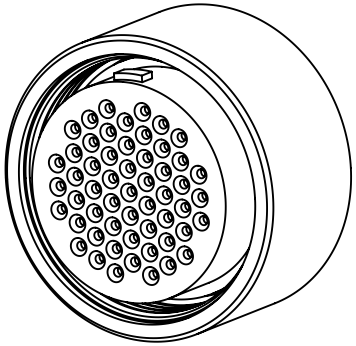

PLUG
FA42256*

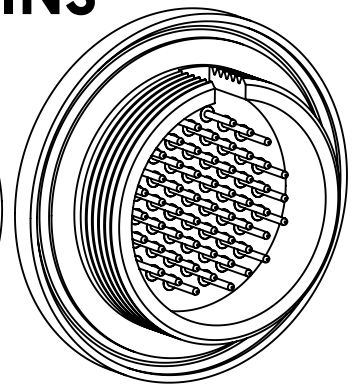

HERMETIC FEEDTHRU
FA42250

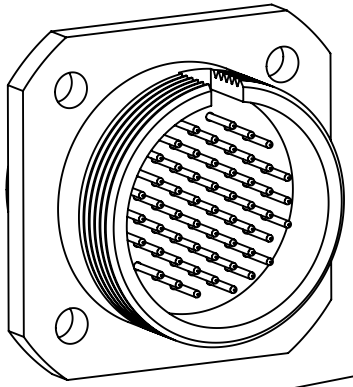

IN-VAC
RECEPTACLE
FA42375

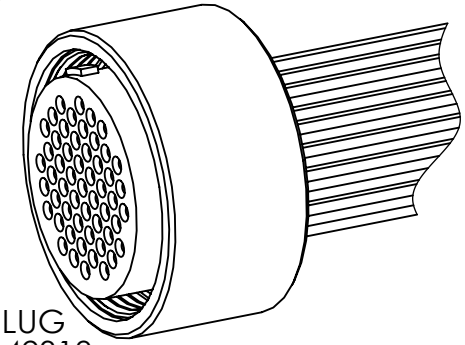

PRE-WIRED PLUG
-KAPTON: FA42318
-PTFE: FA42319

PROPRIETARY AND CONFIDENTIAL

THE INFORMATION CONTAINED IN THIS DRAWING IS THE SOLE PROPERTY OF SOLID SEALING TECHNOLOGY. ANY REPRODUCTION IN PART OR AS A WHOLE WITHOUT THE WRITTEN PERMISSION OF SOLID SEALING TECHNOLOGY IS PROHIBITED.

THIRD ANGLE PROJECTION

TITLE

MICRO SERIES FAMILY

SOLID SEALING TECHNOLOGY

REV.	APP'D	DATE	SCALE 2:1	DIMENSIONS IN INCHES [mm]	DRAWN	HJ	04/09/2021	REV: A2	WWW.SOLIDSEALING.COM
A2	CW	4/21/2022	MPCL0735-11		ENG APPR.	HJ	05/03/2021		SALES DWG NO. MICRO_SERIES REV. A2

DIMENSIONS ARE FOR REFERENCE ONLY. UNLESS NOTED, NO TOLERANCES ARE IMPLIED. CONSULT SST TO DISCUSS YOUR SPECIFIC REQUIREMENTS.

9 PINS

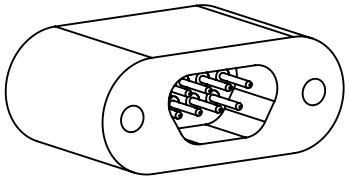

HERMETIC
FEEDTHROUGH FA41500

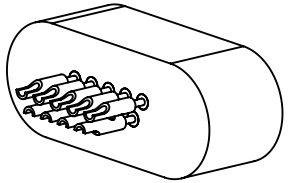

HERMETIC SOLDERCUP
FEEDTHROUGH FA42164

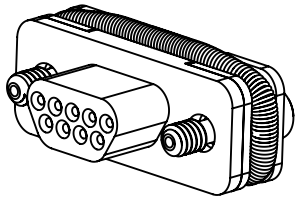

PLUG, GARTER TYPE
FA42137

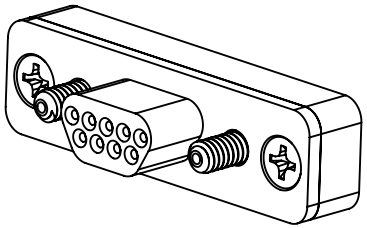

PLUG, SCREW TYPE: FA41506

PRE-WIRED PLUG
-KAPTON: FA42239
-PTFE: FA42419

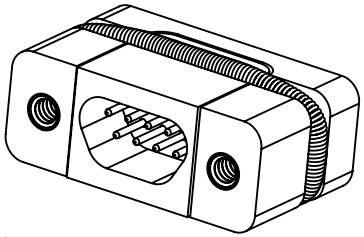

IN-VAC
RECEPTACLE
FA42394

15 PINS

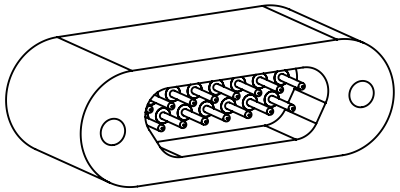

HERMETIC
FEEDTHROUGH FA42273

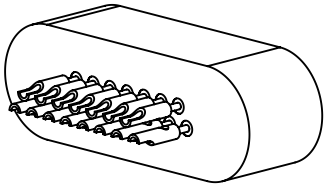

HERMETIC SOLDERCUP
FEEDTHROUGH FA42467

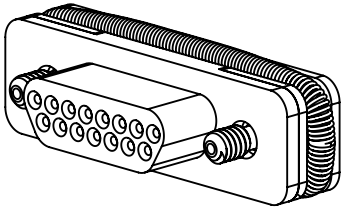

PLUG, GARTER TYPE
FA42475

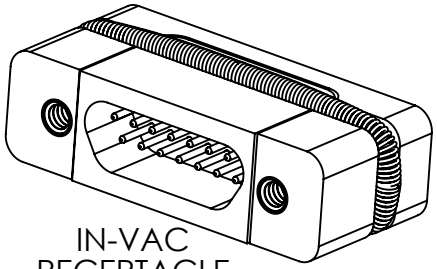

IN-VAC
RECEPTACLE
FA42488

CONTACTS/WIRE

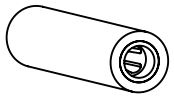

SOCKET CONTACTS
KT41236 (BRASS 125C)
KT41236-02 (TeCu 250C)

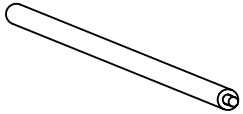

WIRE
KAPTON 48": FA42244
KAPTON 96": FA42245
PTFE 48": FA42246-01/09
PTFE 96": FA42247-01/09

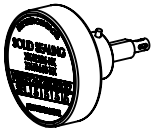

CRIMP TOOL
POSITIONER (PIN & SOCKET)
FP41731

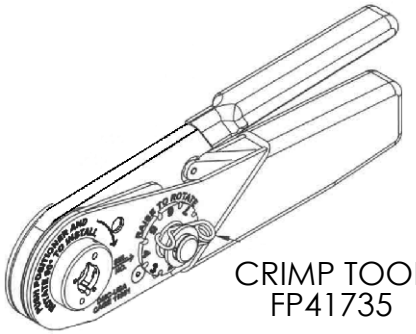

CRIMP TOOL
FP41735

PROPRIETARY AND CONFIDENTIAL
THE INFORMATION CONTAINED IN THIS DRAWING IS THE SOLE PROPERTY OF SOLID SEALING TECHNOLOGY. ANY REPRODUCTION IN PART OR AS A WHOLE WITHOUT THE WRITTEN PERMISSION OF SOLID SEALING TECHNOLOGY IS PROHIBITED.

THIRD ANGLE PROJECTION

TITLE
MICRO SERIES FAMILY

SOLID SEALING TECHNOLOGY

REV.	APP'D	DATE	SCALE 2:1	DIMENSIONS IN INCHES [mm]	DRAWN	HJ	04/09/2021	REV. A2	WWW.SOLIDSEALING.COM
A2	CW	4/21/2022	AHDWR027-41		ENG APPR.	HJ	05/03/2021		SALES DWG NO. MICRO_SERIES REV. A2

DIMENSIONS ARE FOR REFERENCE ONLY. UNLESS NOTED, NO TOLERANCES ARE IMPLIED. CONSULT SST TO DISCUSS YOUR SPECIFIC REQUIREMENTS.